NEW !

7900 SERIES 2K x 2K Precision Imaging Camera

COHU

Very high resolution for precision imaging

Compact size and rugged construction for machine vision environments

Camera Link output for simplified integration

Partial readout for even faster frame rates

Adjustable offset, gain and integration for maximum video control

Snapshot mode for single image flexibility

F-style lens mount for widest options

APPLICATIONS

- **Biomedical inspection**
- **Photometry**
- **Machine vision**
- **Fluoroscopy**
- **Process inspection**
- **X-ray imaging**

4/3" DSP Monochrome Sensor with F-style lens mount and software control

The Cohu 7900 is a 2K x 2K pixel CCD camera for machine vision and precision medical imaging applications. It is capable of 10-bit digital output at 8 frames per second via Camera Link interface.

This is the highest resolution camera in its class, utilizing a 2048 x 2048 progressive scan sensor. Other features include partial readout for higher frame rates, remote offset and gain adjustment, and and external integration through the Camera Link interface for low light sensitivity. A "snapshot" mode allows for single images to be captured and analyzed.

Its small compact size makes it ideal for use in applications requiring high-resolution images in tight physical space. An F-mount lens, traditionally used in SLR cameras, achieves the high resolution potential of the larger format.

The Camera Link interface assures interchangeability with other professional imaging products.

Its large lens format, high resolution and option of no sensor cover glass lends itself to a wide range of applications, including biomedical inspection, machine vision, photometry, fluoroscopy, print web inspection, document archiving, industrial inspection, and x-ray applications.

CAMERA Link™

PRELIMINARY

7900 Series — 2048 x 2048 Pixel CCD Camera

SPECIFICATIONS

ELECTRICAL

Sensor
4/3" monochrome Interline transfer CCD sensor with square pixels

Pixel Cell Size
7.4 x 7.4 µm

Picture Elements
2048 (H) x 2048 (V) pixels (1:1 aspect ratio)

Sensitivity
4 lux with 1/30 sec shutter and min gain, @ 3200°K

Dynamic Range
58 dB (black level)

Signal to Noise Ratio
48 dB at 25°C and min. gain

Spectral Response
with sensor glass (standard)

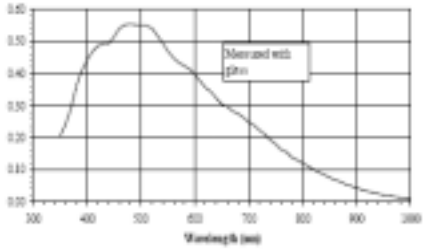

without sensor glass (optional)

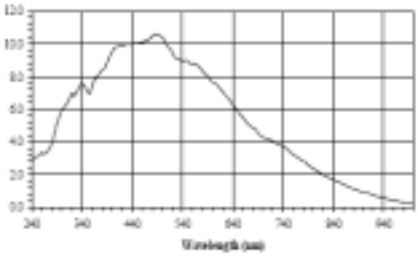

Horizontal Pixel Frequency (Pixel Clock)
40 MHz

Sync
Internal xtal

Frame Rate
8 frames/sec. at full resolution

Output
Camera Link format, 10 bit digital video, horizontal drive, vertical drive, pixel clock

Input Power
12 VDC, <800 mA

MECHANICAL

Dimensions
4.80" (L) x 2.06" (W) X x2.06" (H)

Lens Mount
F style

Weight
14 oz.

ENVIRONMENTAL

Operating Temperature
-20° C to 60° C operating

Shock (less lens)
15 g's any axis, per MIL-E-5400T

Regulatory
Meets or exceeds CE Class A

ORDERING INFORMATION

79xx-xx0x/XXXX

2K x 2K Progressive Scan Camera

COOLER
1 - Uncooled

SENSOR
1 - Monochrome

CAMERA OUTPUT
2 - Camera Link

OUTPUT DEPTH
1 - Single channel, 10-bits

ACCESSORIES
0 - None
1 - Accessory Kit, includes Allen wrench, mounting block, mating power connector

LENSES
Select from a wide range of F-mount lenses that suit your application.

Operation Features
All functions controlled through Camera Link interface
- Continuous: Free running (No shutter, High speed shutter, or Low speed shutter)
- Snapshot: On command
- External Integration (any duration)
- Gain Control: 0 dB to 30 dB Manual via serial command
- High Speed Shutter Control: 1/25,000 sec to full frame via serial command
- Low Speed Shutter Control: 1 to 65000 frames via serial command
- Offset: Adjustable via serial command
- Partial Readout: Starting and stopping lines selectable in 4 line increments

Control Features
All features controlled through Camera Link interface
- All adjustments software controlled and saved in nonvolatile registers for power-up recall.
- Programmable logic and firmware field-upgradable through internal port.

Preset Default Configuration supported.

MECHANICAL DIMENSIONS

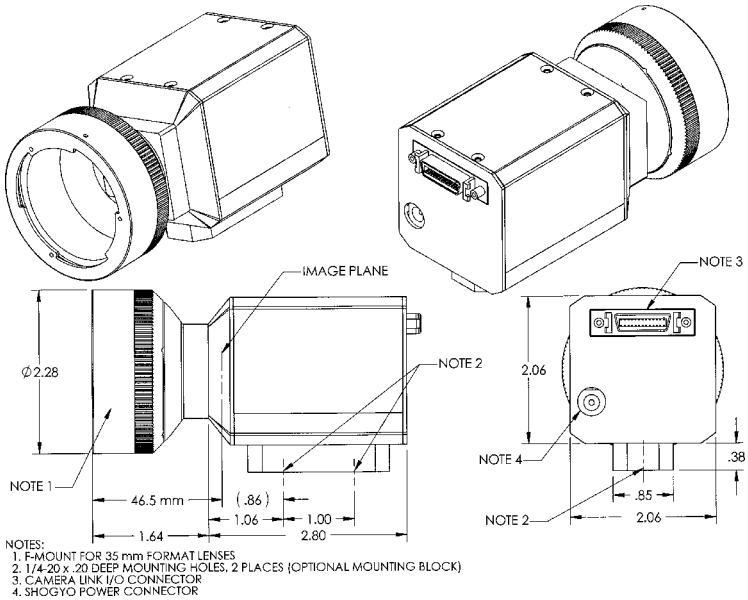

NOTES:
1. F-MOUNT FOR 35 mm FORMAT LENSES
2. 1/4-20 x .20 DEEP MOUNTING HOLES, 2 PLACES (OPTIONAL MOUNTING BLOCK)
3. CAMERA LINK I/O CONNECTOR
4. SHOGYO POWER CONNECTOR

Specifications subject to change without notice.

Cohu, Inc./Electronics Division
P.O. Box 85623 San Diego, CA 92186
Phone: 858/277-6700
Fax: 858/277-0221
www.cohu-cameras.com

ADVANCED VIDEO TECHNOLOGY Made in the U.S.A.